Europa Leisure

KARIN CHAIR
MO-685, MO-687, MO-689

ASSEMBLY INSTRUCTIONS

1 **Assemble on a soft surface to protect the chair**

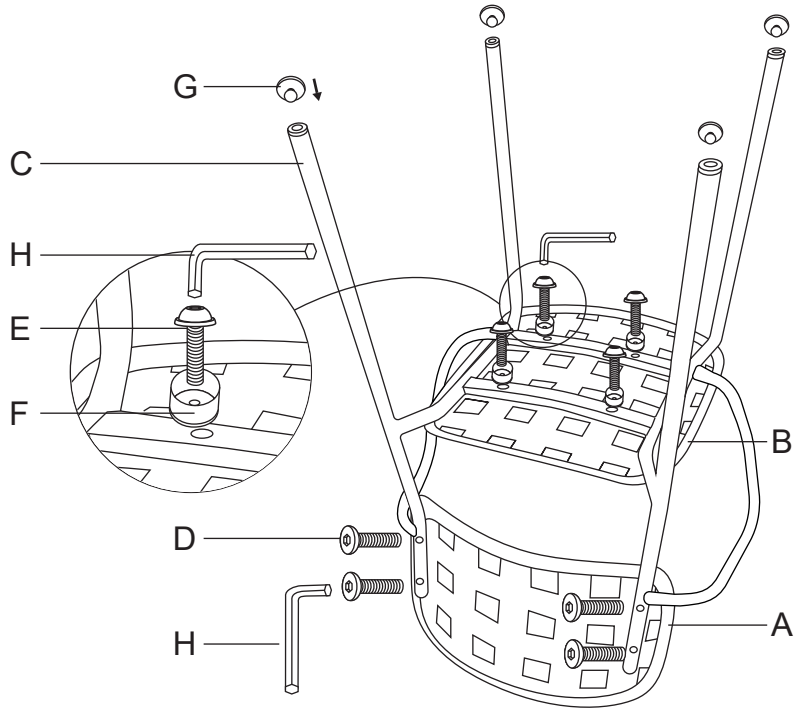

2

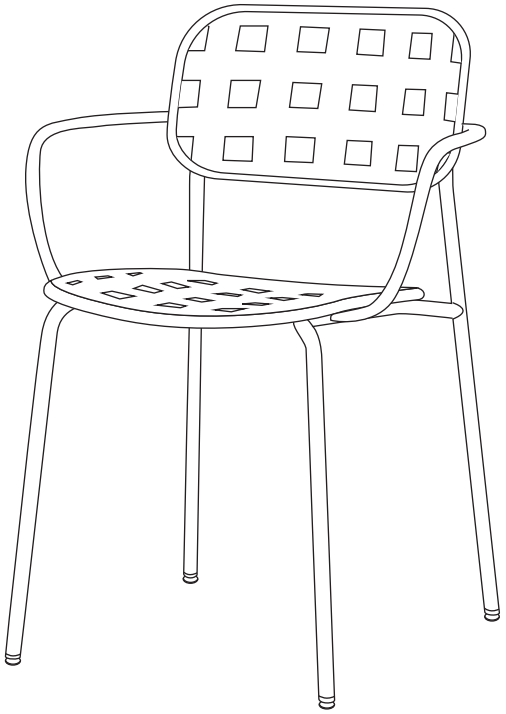

Ax1	Bx1	Cx1	Dx4	Ex4	Fx4	Gx4	Hx1
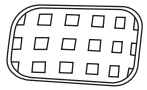							

www.europaleisure.co.uk
sales@europaleisure.co.uk
Netherhampton Business Centre, Salisbury. SP2 8PU