BM-822 Lavello Table
BM-872 Trelluna Table

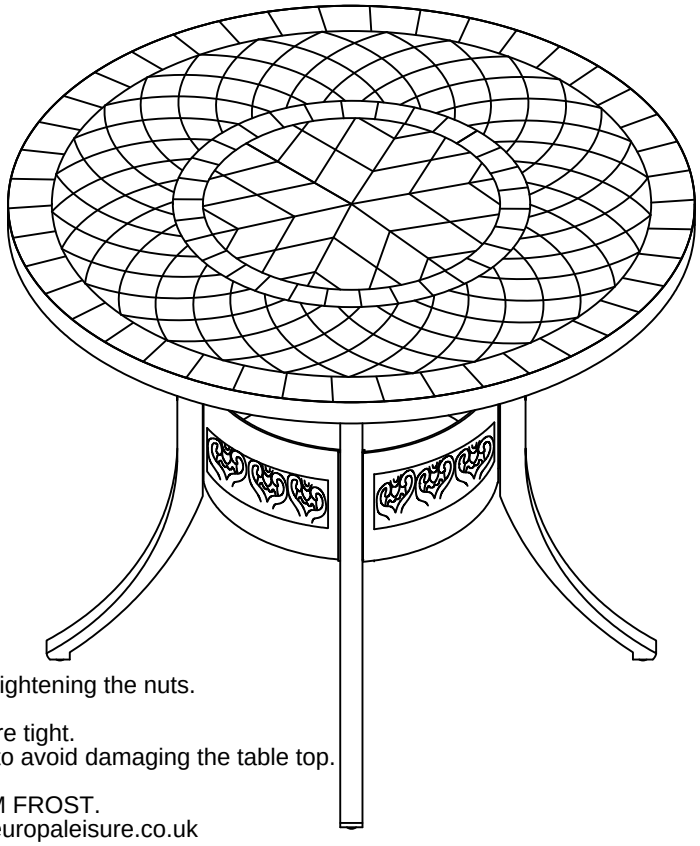

Loosely assemble the table before tightening the nuts.
Do not over-tighten the fittings.
Periodically check that the fittings are tight.
Please assemble on a soft surface to avoid damaging the table top.

PROTECT THE TABLE TOP FROM FROST.
For full care instructions visit www.europaleisure.co.uk

1	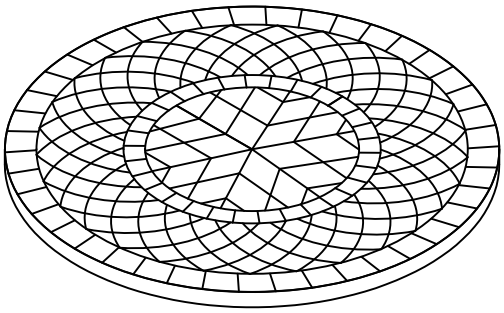	1PC	A	 M8*50 Bolt	4PCS
			B	 M8*35 Bolt	8PCS
			C		12PCS
2	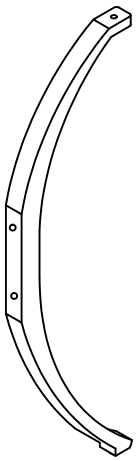	4PCS	D		12PCS
			E		12PCS
			F		12PCS
3	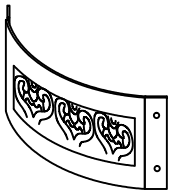	4PCS	G	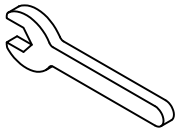	1PC
			H	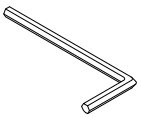	1PC

NO:3-1

1

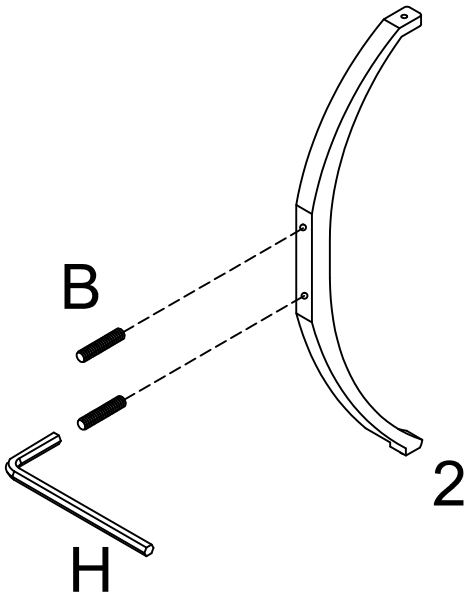

2

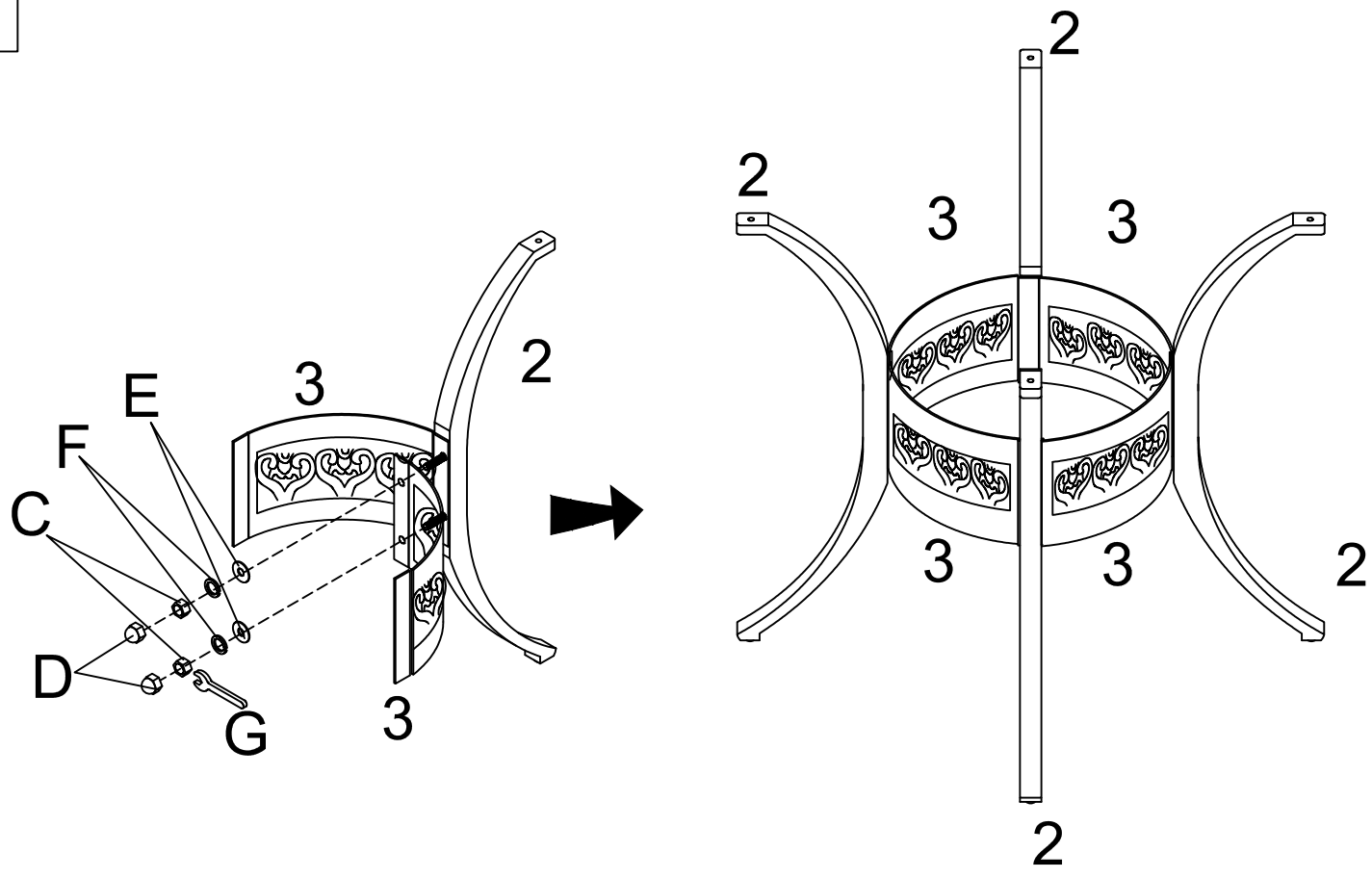

NO:3-2

3

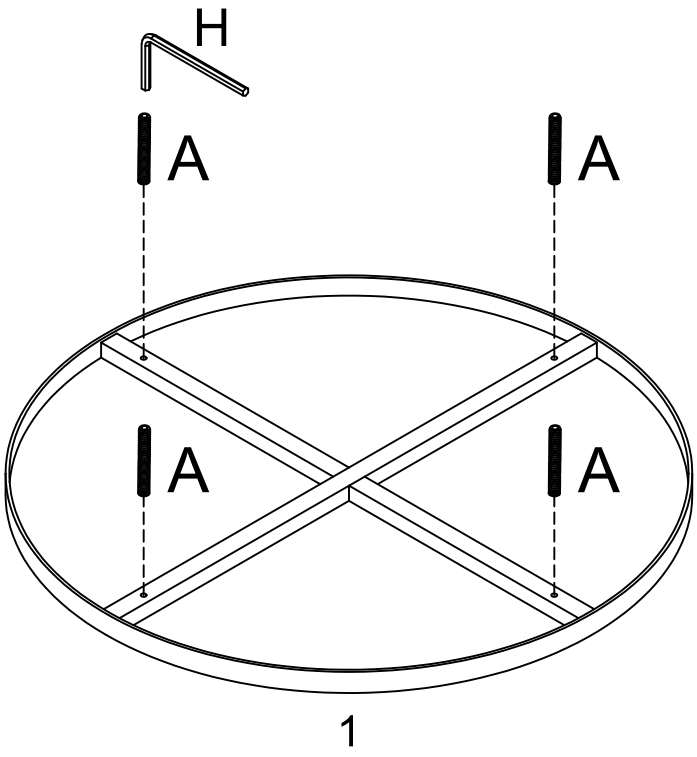

1

4

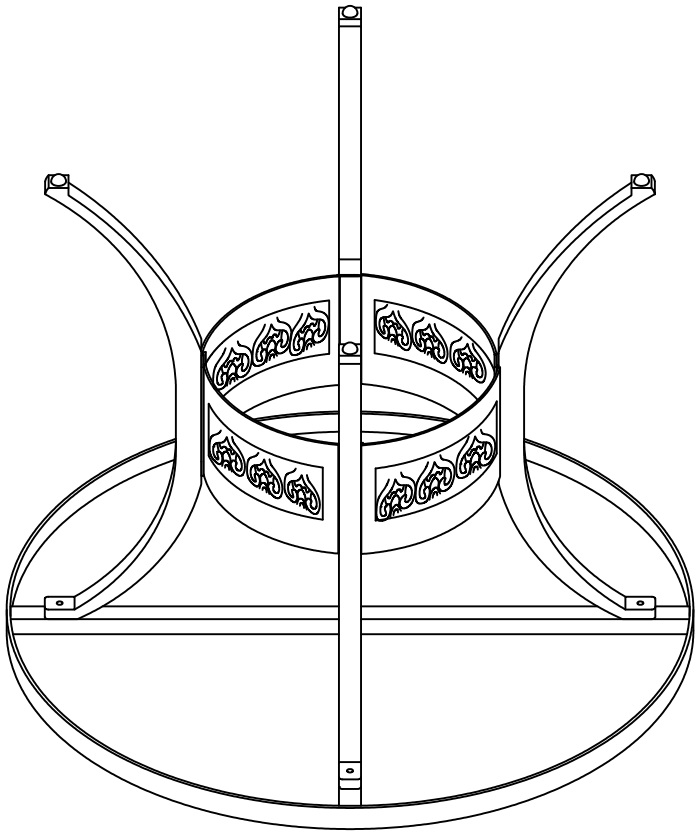

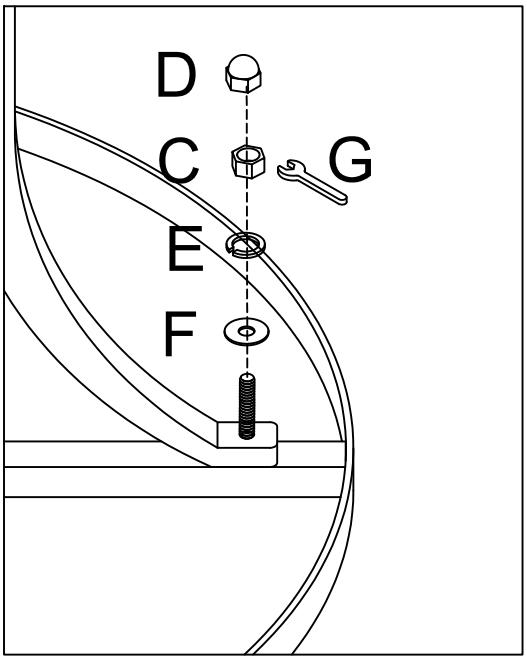

Once assembled, lift the table into position; do not roll it.
When moving the table, it should be lifted by two people and not dragged.